New Jersey Semi-Conductor Products, Inc.

20 STERN AVE.
SPRINGFIELD, NEW JERSEY 07081
U.S.A.

TELEPHONE: (973) 376-2922
(212) 227-6005
FAX: (973) 376-8960

Transistors

Type	Polarity	Maximum Ratings					Electrical Characteristics @ 25°C (One Side)						Tracking	f_t MHz Min	Package
		Ambient P_D		V_{CB} Volts	V_{CE} Volts	V_{EB} Volts	H_{FE} @ I_C		V_{CE}(Sat) @ I_C/I_B		Matching		ΔV_{BE} ΔT −55°C to +125°C in μV/°C		
		One Side mW	Both Sides mW				Min/Max	mA	Volts	mA/mA	H_{FE} %	V_{BE} in mV			
2N3816	PNP	250	350	60	60	5	100/400	0.01	0.20	0.1/0.01	10	3	10	100	TO-89
2N3816A	PNP	250	350	60	60	5	100/400	0.01	0.20	0.1/0.01	5	1.5	5	100	TO-89
2N3817	PNP	250	350	60	60	5	225/700	0.01	0.20	0.1/0.01	10	3	10	100	TO-89
2N3817A	PNP	250	350	60	60	5	225/700	0.01	0.20	0.1/0.01	5	1.5	5	100	TO-89
2N4937	PNP	500	600	50	40	5	40/200	0.1	0.3*	10/1	10	3	10	300	TO-78
2N4938	PNP	500	600	50	40	5	40/200	0.1	0.3*	10/1	20	5	20	300	TO-78
2N4939	PNP	500	600	50	40	5	40/200	0.1	0.3*	10/1	–	–	–	300	TO-78
2N4940	PNP	250	350	50	40	5	40/200	0.1	0.3*	10/1	20	5	20	300	TO-89
2N4941	PNP	250	350	50	40	5	40/200	0.1	0.3*	10/1	10	3	10	300	TO-89
2N4942	PNP	250	350	50	40	5	40/200	0.1	0.3*	10/1	–	–	–	300	TO-89

*Typical Values

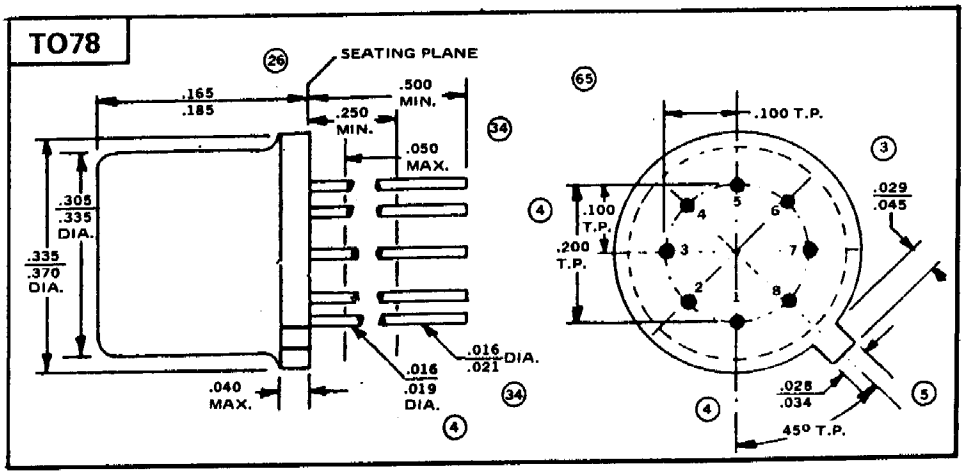

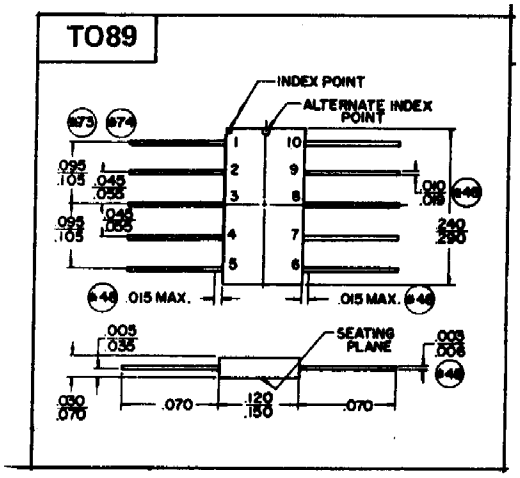

NJ Semi-Conductors reserves the right to change test conditions, parameter limits and package dimensions without notice. Information furnished by NJ Semi-Conductors is believed to be both accurate and reliable at the time of going to press. However NJ Semi-Conductors assumes no responsibility for any errors or omissions discovered in its use. NJ Semi-Conductors encourages customers to verify that datasheets are current before placing orders.