TOSHIBA Transistor Silicon NPN Diffused Type (PCT process)

2SD1221

Audio Frequency Power Amplifier Application

- Low collector saturation voltage
  : $V_{CE\ (sat)}$ = 4.0 V (typ.) (I_C = 3 A, I_B = 0.3 A)
- High power dissipation: P_C = 20 W (Tc = 25°C)
- Complementary to 2SB906

Maximum Ratings (Ta = 25°C)

Characteristics		Symbol	Rating	Unit
Collector-base voltage		V_{CBO}	60	V
Collector-emitter voltage		V_{CEO}	60	V
Emitter-base voltage		V_{EBO}	7	V
Collector current		I_C	3	A
Base current		I_B	0.5	A
Collector power dissipation	Ta = 25°C	P_C	1.0	W
	Tc = 25°C		20	
Junction temperature		T_j	150	°C
Storage temperature range		T_{stg}	−55 to 150	°C

Unit: mm

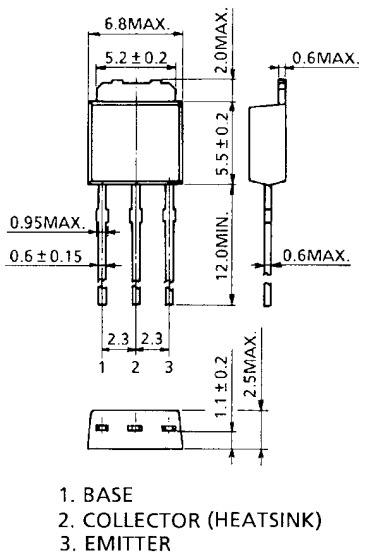

JEDEC	—
JEITA	—
TOSHIBA	2-7B1A

Weight: 0.36 g (typ.)

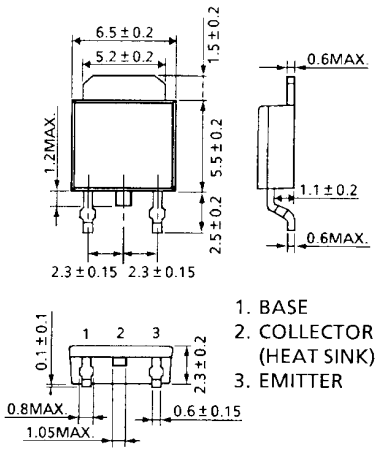

JEDEC	—
JEITA	—
TOSHIBA	2-7J1A

Weight: 0.36 g (typ.)

Electrical Characteristics (Ta = 25°C)

Characteristics		Symbol	Test Condition	Min	Typ.	Max	Unit
Collector cut-off current		I_{CBO}	V_{CB} = 60 V, I_E = 0	—	—	100	μA
Emitter cut-off current		I_{EBO}	V_{EB} = 7 V, I_C = 0	—	—	100	μA
Collector-emitter breakdown voltage		$V_{(BR)\ CEO}$	I_C = 50 mA, I_B = 0	60	—	—	V
DC current gain		$h_{FE\ (1)}$ (Note)	V_{CE} = 5 V, I_C = 0.5 A	60	—	300	
		$h_{FE\ (2)}$	V_{CE} = 5 V, I_C = 3 A	20	—	—	
Collector-emitter saturation voltage		$V_{CE\ (sat)}$	I_C = 3 A, I_B = 0.3 A	—	0.4	1.0	V
Base-emitter voltage		V_{BE}	V_{CE} = 5 V, I_C = 0.5 A	—	0.7	1.0	V
Transition frequency		f_T	V_{CE} = 5 V, I_C = 0.5 A	—	3.0	—	MHz
Collector output capacitance		C_{ob}	V_{CB} = 10 V, I_E = 0, f = 1 MHz	—	70	—	pF
Switching time	Turn-on time	t_{on}	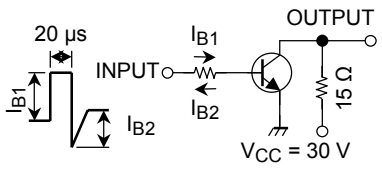 I_{B1} = −I_{B2} = 0.2 A, DUTY CYCLE ≤ 1%	—	0.8	—	μs
	Storage time	t_{stg}		—	1.5	—	
	Fall time	t_f		—	0.8	—	

Note: h_{FE} classification O: 60 to 120, Y: 100 to 200, GR: 150 to 300

Marking

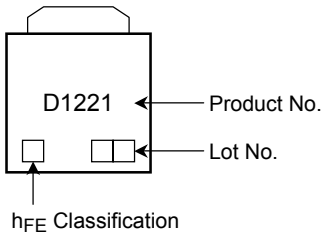

Explanation of Lot No.

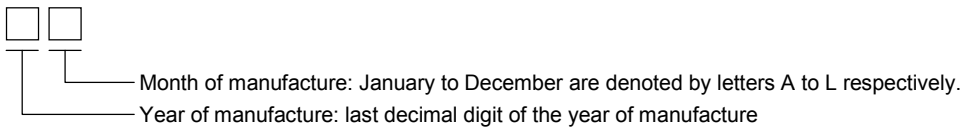

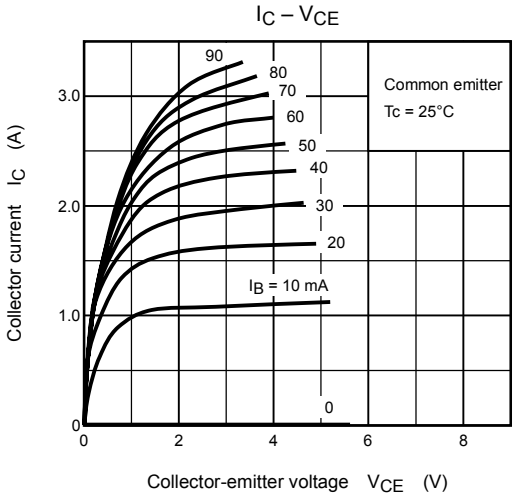
IC – VCE
Common emitter
Tc = 25°C
90
80
70
60
50
40
30
20
IB = 10 mA
0
Collector current IC (A)
Collector-emitter voltage VCE (V)

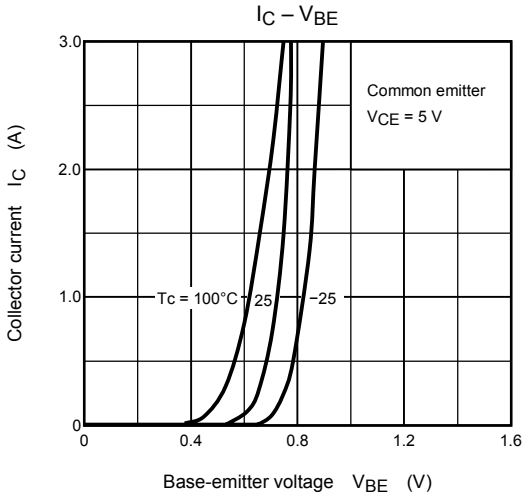
IC – VBE
Common emitter
VCE = 5 V
Tc = 100°C
25
−25
Collector current IC (A)
Base-emitter voltage VBE (V)

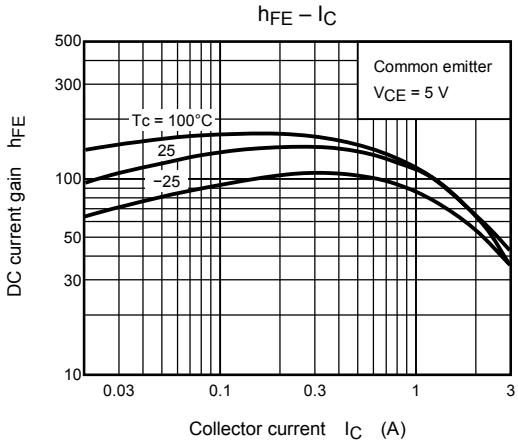
hFE – IC
Common emitter
VCE = 5 V
Tc = 100°C
25
−25
DC current gain hFE
Collector current IC (A)

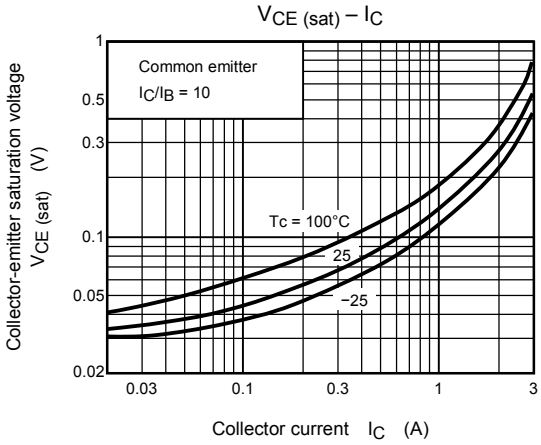
VCE (sat) – IC
Common emitter
IC/IB = 10
Tc = 100°C
25
−25
Collector-emitter saturation voltage VCE (sat) (V)
Collector current IC (A)

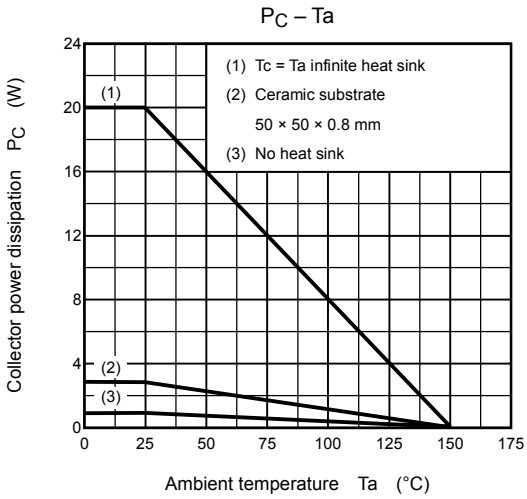
PC – Ta
(1) Tc = Ta infinite heat sink
(2) Ceramic substrate
50 × 50 × 0.8 mm
(3) No heat sink
(1)
(2)
(3)
Collector power dissipation PC (W)
Ambient temperature Ta (°C)

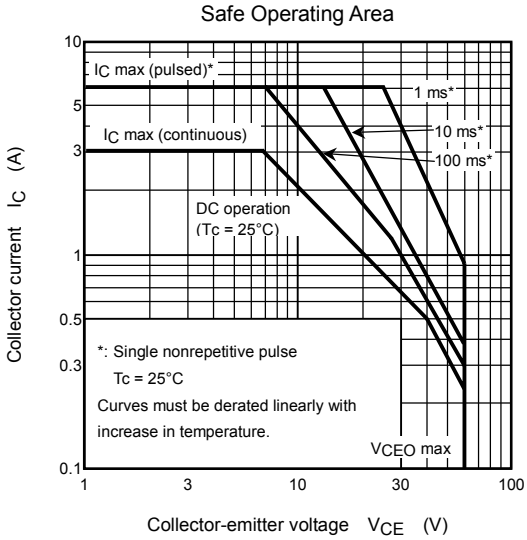
Safe Operating Area
IC max (pulsed)*
IC max (continuous)
1 ms*
10 ms*
100 ms*
DC operation
(Tc = 25°C)
*: Single nonrepetitive pulse
Tc = 25°C
Curves must be derated linearly with
increase in temperature.
VCEO max
Collector current IC (A)
Collector-emitter voltage VCE (V)

RESTRICTIONS ON PRODUCT USE

000707EAA

- TOSHIBA is continually working to improve the quality and reliability of its products. Nevertheless, semiconductor devices in general can malfunction or fail due to their inherent electrical sensitivity and vulnerability to physical stress. It is the responsibility of the buyer, when utilizing TOSHIBA products, to comply with the standards of safety in making a safe design for the entire system, and to avoid situations in which a malfunction or failure of such TOSHIBA products could cause loss of human life, bodily injury or damage to property.
  In developing your designs, please ensure that TOSHIBA products are used within specified operating ranges as set forth in the most recent TOSHIBA products specifications. Also, please keep in mind the precautions and conditions set forth in the “Handling Guide for Semiconductor Devices,” or “TOSHIBA Semiconductor Reliability Handbook” etc..
- The TOSHIBA products listed in this document are intended for usage in general electronics applications (computer, personal equipment, office equipment, measuring equipment, industrial robotics, domestic appliances, etc.). These TOSHIBA products are neither intended nor warranted for usage in equipment that requires extraordinarily high quality and/or reliability or a malfunction or failure of which may cause loss of human life or bodily injury (“Unintended Usage”). Unintended Usage include atomic energy control instruments, airplane or spaceship instruments, transportation instruments, traffic signal instruments, combustion control instruments, medical instruments, all types of safety devices, etc.. Unintended Usage of TOSHIBA products listed in this document shall be made at the customer’s own risk.
- The information contained herein is presented only as a guide for the applications of our products. No responsibility is assumed by TOSHIBA CORPORATION for any infringements of intellectual property or other rights of the third parties which may result from its use. No license is granted by implication or otherwise under any intellectual property or other rights of TOSHIBA CORPORATION or others.
- The information contained herein is subject to change without notice.