FRONT BOARD

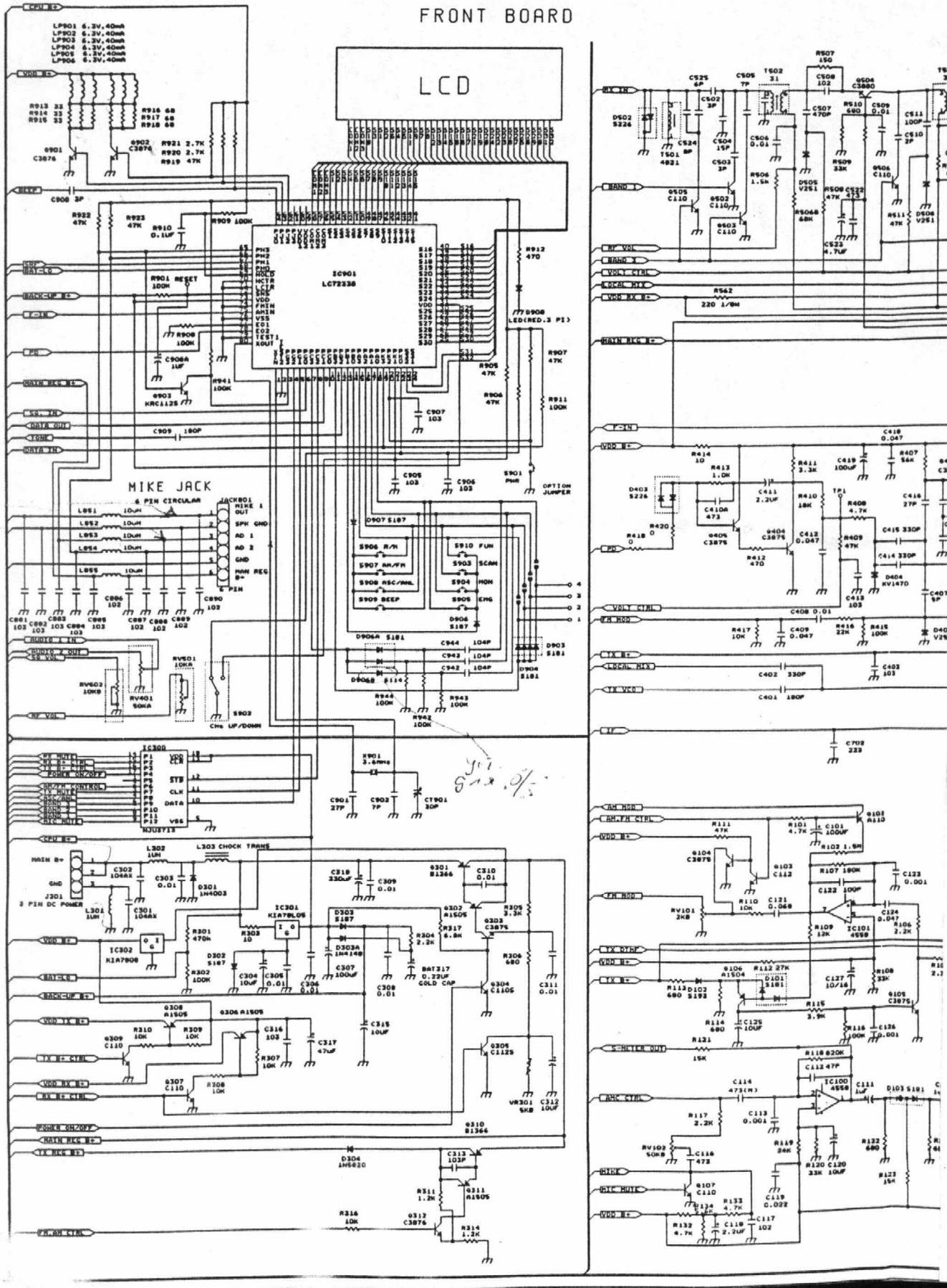
LCD
IC901
LC72338
MIKE JACK
6 PIN CIRCULAR
JACK801
MIKE 1 OUT
SPK GND
AD 1
AD 2
GND
MAN REG B+
6 PIN
OPTION JUMPER
S901 PWR
S906 R/M
S907 AM/FM
S908 ASC/ANL
S909 BEEP
S910 FUN
S903 SCAN
S904 MON
S905 EMG
S902 CH+ UP/DOWN
RV401 50KA
RV501 10KB
RV502 10KB
IC300
NJU3718
X901 3.6MHz
J301
3 PIN DC POWER
IC301 KIA78L05
IC302 KIA7808
BAT317 0.22UF GOLD CAP
IC100 4558
IC101 4558
D304 1N5820
D903 S181
D904 S181
D905 S181
D906 S181
D907 S187
D908 LED(RED.3 PI)
D404 KV1470
D403 S226
D502 S226
D501 S181
D102 S192
D103 S181
D304 1N4003
D303A 1N4148
D302 S187
D303 S187
D301 1N4003
D306A S181
D306B S114
D404 KV1470
D502 S226
D505 V251
D506 V251
D508 V251
D509 V251
D510 V251
D511 V251
D512 V251
D513 V251
D514 V251
D515 V251
D516 V251
D517 V251
D518 V251
D519 V251
D520 V251
D521 V251
D522 V251
D523 V251
D524 V251
D525 V251
D526 V251
D527 V251

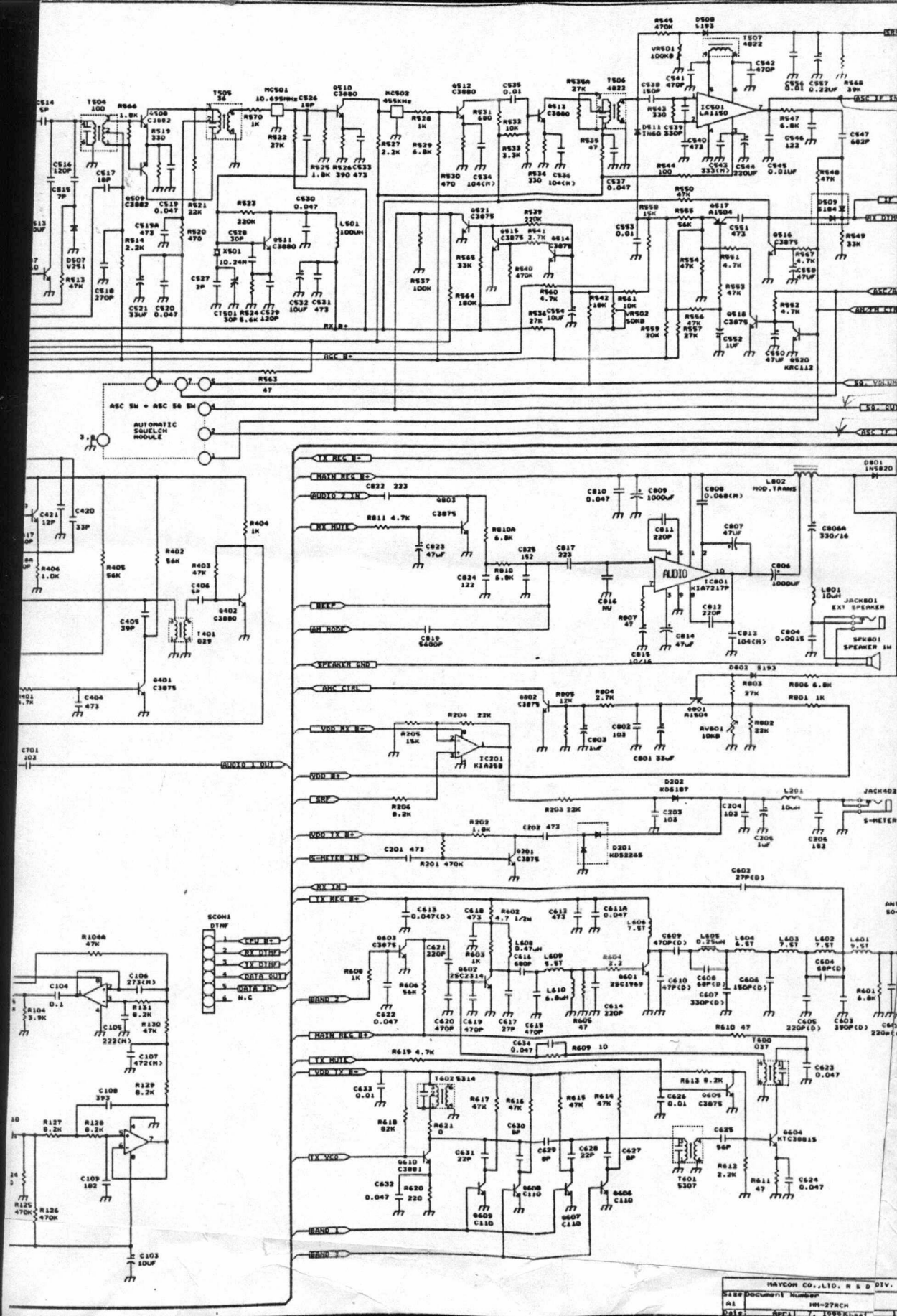
AUTOMATIC SQUELCH MODULE
ASC SW + ASC SQ SW
RX B+
ASC B+
TX MIC B+
MAIN MIC B+
AUDIO 2 IN
MIC MUTE
BEEP
AM HOOK
SPEAKER GND
AMC CTRL
VDD RX B+
AUDIO 1 OUT
VDD B+
SMP
VDD TX B+
S-METER IN
MIC IN
TX MIC B+
CPU B+
RX DTMF
TX DTMF
DATA OUT
DATA IN
N.C
BAND 2
MAIN MIC B+
TX MUTE
VDD TX B+
TX VCO
BAND 1
BAND 3
AUDIO
IC801 KIA7217P
IC501 LA1160
IC201 KIA358
MOD.TRANS
JACK801 EXT SPEAKER
SPK801 SPEAKER 1W
JACK402 S-METER
SCON1 DTMF
HAYCOM CO.,LTD. R & D DIV.
Size Document Number
A1 HM-27RCH
Date: April 7, 1995