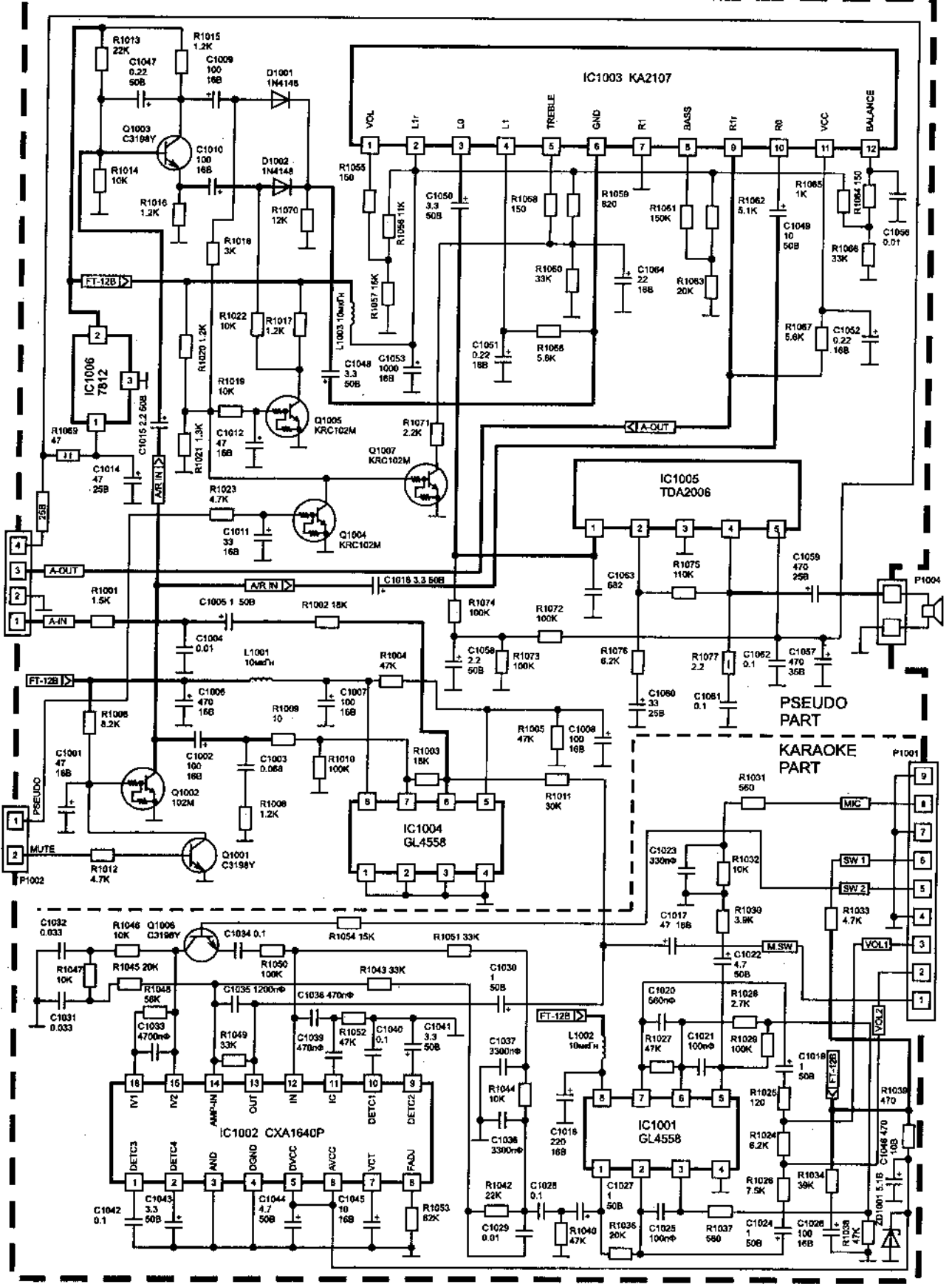
IC1003 KA2107
VOL
L1r
LG
L1
TREBLE
GND
R1
BASS
R1r
R0
VCC
BALANCE
IC1006 7812
IC1005 TDA2006
IC1004 GL4558
IC1001 GL4558
IC1002 CXA1640P
PSEUDO PART
KARAOKE PART
A-OUT
A-IN
A/R IN
FT-12В
MUTE
PSEUDO
MIC
SW 1
SW 2
M.SW
VOL1
VOL2
P1001
P1002
P1004
Q1003 C3198Y
Q1001 C3198Y
Q1002 102M
Q1004 KRC102M
Q1005 KRC102M
Q1006 C3198Y
Q1007 KRC102M
D1001 1N4148
D1002 1N4148
L1001 10мкГн
L1002 10мкГн
L1003 10мкГн
ZD1001 5.1В

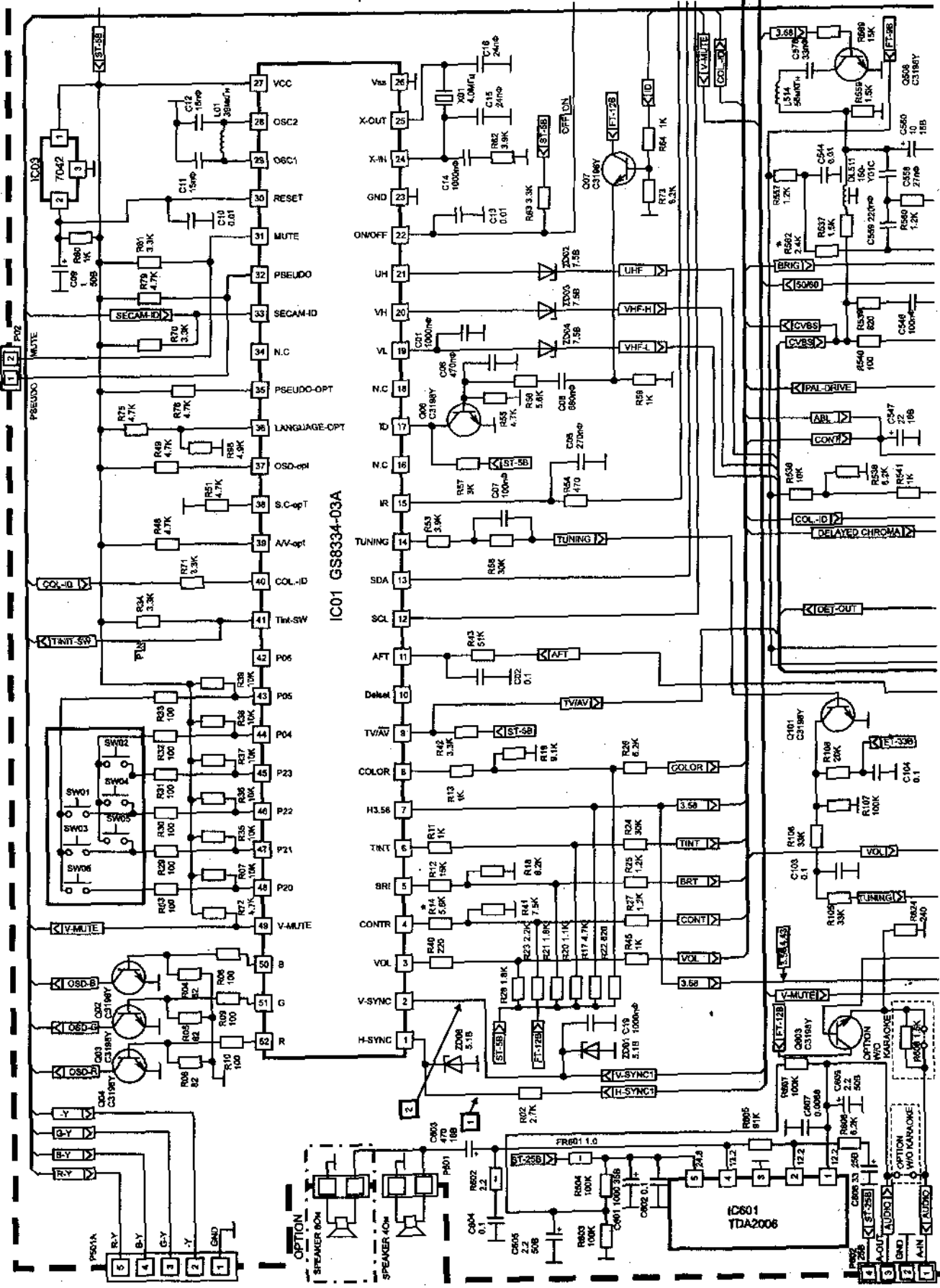
IC01 GS8334-03A
IC601 TDA2006
VCC
OSC2
OSC1
RESET
MUTE
PSEUDO
SECAM-ID
N.C
PSEUDO-OPT
LANGUAGE-OPT
OSD-opt
S.C-opT
A/V-opt
COL.-ID
Tint-SW
P06
P05
P04
P23
P22
P21
P20
V-MUTE
B
G
R
Vss
X-OUT
X-IN
GND
ON/OFF
UH
VH
VL
ID
IR
TUNING
SDA
SCL
AFT
Delset
TV/AV
COLOR
H3.58
TINT
BRI
CONTR
VOL
V-SYNC
H-SYNC
UHF
VHF-H
VHF-L
PAL-DRIVE
ABL
CONT
DELAYED CHROMA
DET-OUT
BRIG
50/60
CVBS
OPTION
SPEAKER 8Ω
SPEAKER 4Ω
OPTION W/O KARAOKE
AUDIO
A-OUT
A-IN
GND

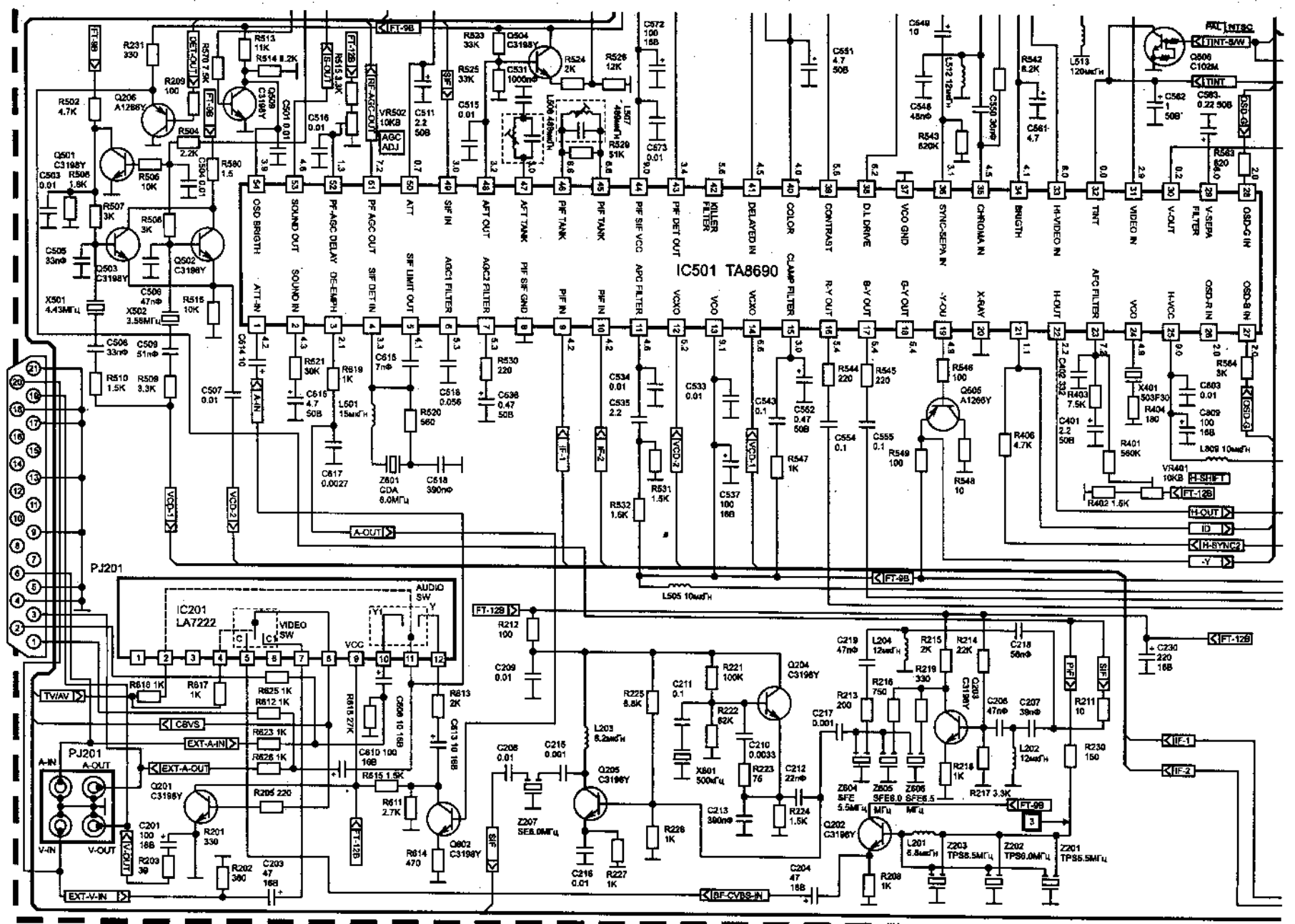
IC501 TA8690
OSD BRIGTH
SOUND OUT
PF AGC DELAY
PF AGC OUT
ATT
SIF IN
AFT OUT
AFT TANK
PIF TANK
PIF TANK
PIF SIF VCC
PIF DET OUT
KILLER FILTER
DELAYED IN
COLOR
CONTRAST
D.L DRIVE
VCO GND
SYNC-SEPA IN
CHROMA IN
BRIGTH
H-VIDEO IN
TINT
VIDEO IN
V-OUT
V-SEPA FILTER
OSD-G IN
ATT-IN
SOUND IN
DE-EMPH
SIF DET IN
SIF LIMIT OUT
AGC1 FILTER
AGC2 FILTER
PIF SIF GND
PIF IN
PIF IN
APC FILTER
VCXO
VCO
VCXO
CLAMP FILTER
R-Y OUT
B-Y OUT
G-Y OUT
-Y-OU
X-RAY
H-OUT
AFC FILTER
VCO
H-VCC
OSD-R IN
OSD-B IN
PJ201
IC201
LA7222
AUDIO SW
VIDEO SW
TV/AV
CBVS
EXT-A-IN
EXT-A-OUT
EXT-V-IN
A-IN
A-OUT
V-IN
V-OUT
BF-CVBS-IN
IF-1
IF-2
H-SHIFT
H-OUT
ID
H-SYNC2
-Y
TINT-SW
TINT
PAL NTSC
FT-9B
FT-12B
A-OUT
VCO-1
VCO-2
AGC ADJ
VR502 10KB
VR401 10KB
Z601 CDA 6.0МГц
Z207 SFE6.0МГц
Z604 SFE 5.5МГц
Z605 SFE6.0 МГц
Z606 SFE6.5 МГц
Z203 TPS5.5МГц
Z202 TPS6.0МГц
Z201 TPS5.5МГц
X501 4.43МГц
X502 3.58МГц
X401 503F30
X801 500кГц
L505 10мкГн
L601 15мкГн
L809 10мкГн
L203 6.2мкГн
L201 6.8мкГн
L202 12мкГн
L204 12мкГн
L512 12мкГн
L513 120мкГн
L508 180мкГн
L507 480мкГн
Q206 A1266Y
Q501 C3198Y
Q502 C3198Y
Q503 C3198Y
Q504 C3198Y
Q505 A1266Y
Q506 C1024
Q201 C3198Y
Q202 C3198Y
Q203 C3198Y
Q204 C3198Y
Q205 C3198Y
Q602 C3198Y
Q609 C3198Y
PIF
SIF

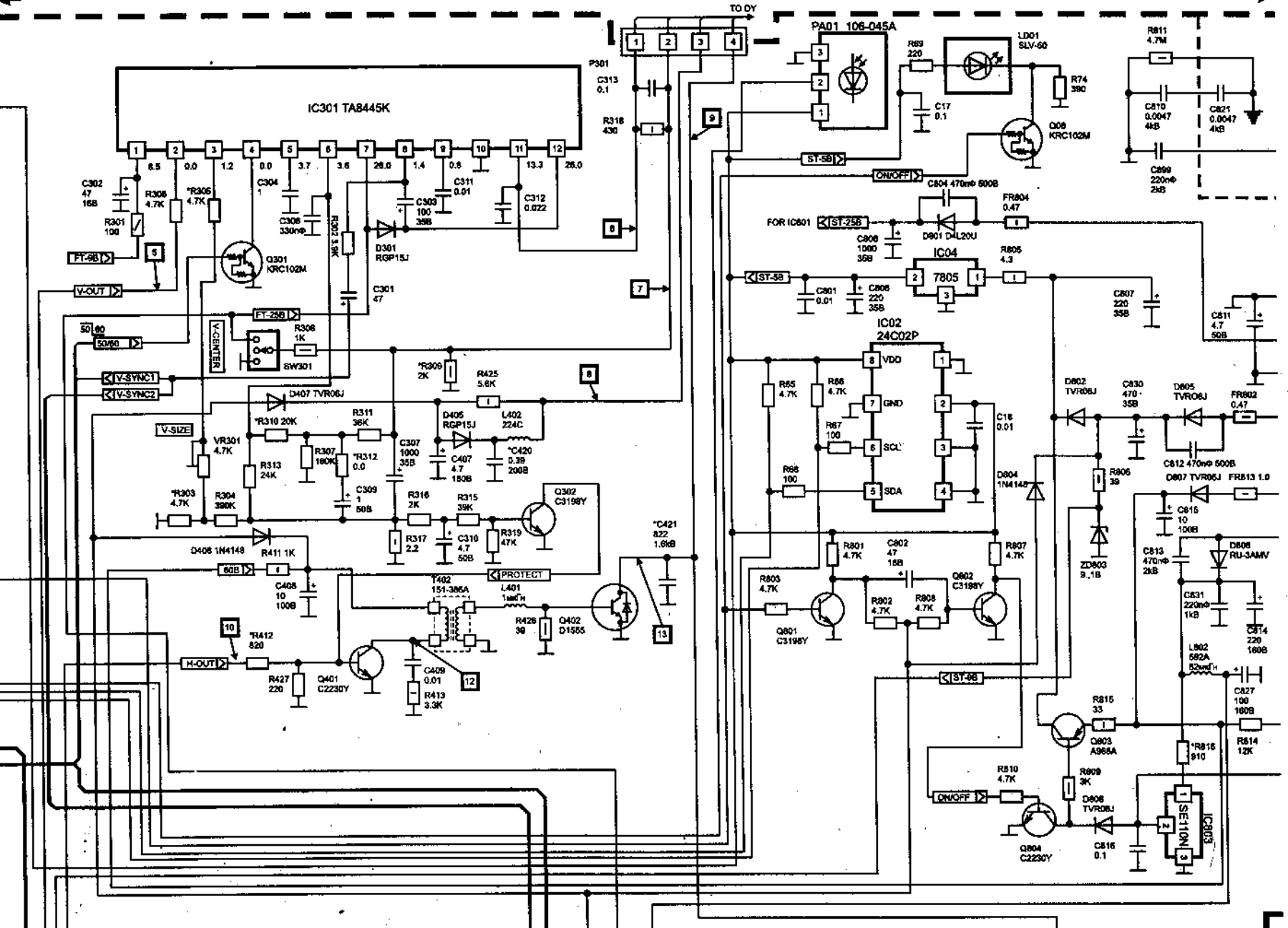
IC301 TA8445K
TO DY
P301
PA01 106-045A
LD01 SLV-60
Q08 KRC102M
Q301 KRC102M
D301 RGP15J
D407 TVR06J
D405 RGP15J
D408 1N4148
D801 DL20U
D804 1N4148
D802 TVR06J
D805 TVR06J
D807 TVR06J
D808 RU-3AMV
D806 TVR06J
ZD803 9.1B
IC04 7805
IC02 24C02P
VDD
GND
SCL
SDA
Q302 C3198Y
Q402 D1555
Q401 C2230Y
Q801 C3198Y
Q802 C3198Y
Q803 A966A
Q804 C2230Y
IC803 SE110N
T402 151-385A
L401 1mH
L402 224C
L802 592A 52mH
FT-5B
FT-25B
V-OUT
V-CENTER
SW301
50/60
V-SYNC1
V-SYNC2
V-SIZE
H-OUT
PROTECT
ST-5B
ST-25B
ST-6B
ON/OFF
FOR IC801

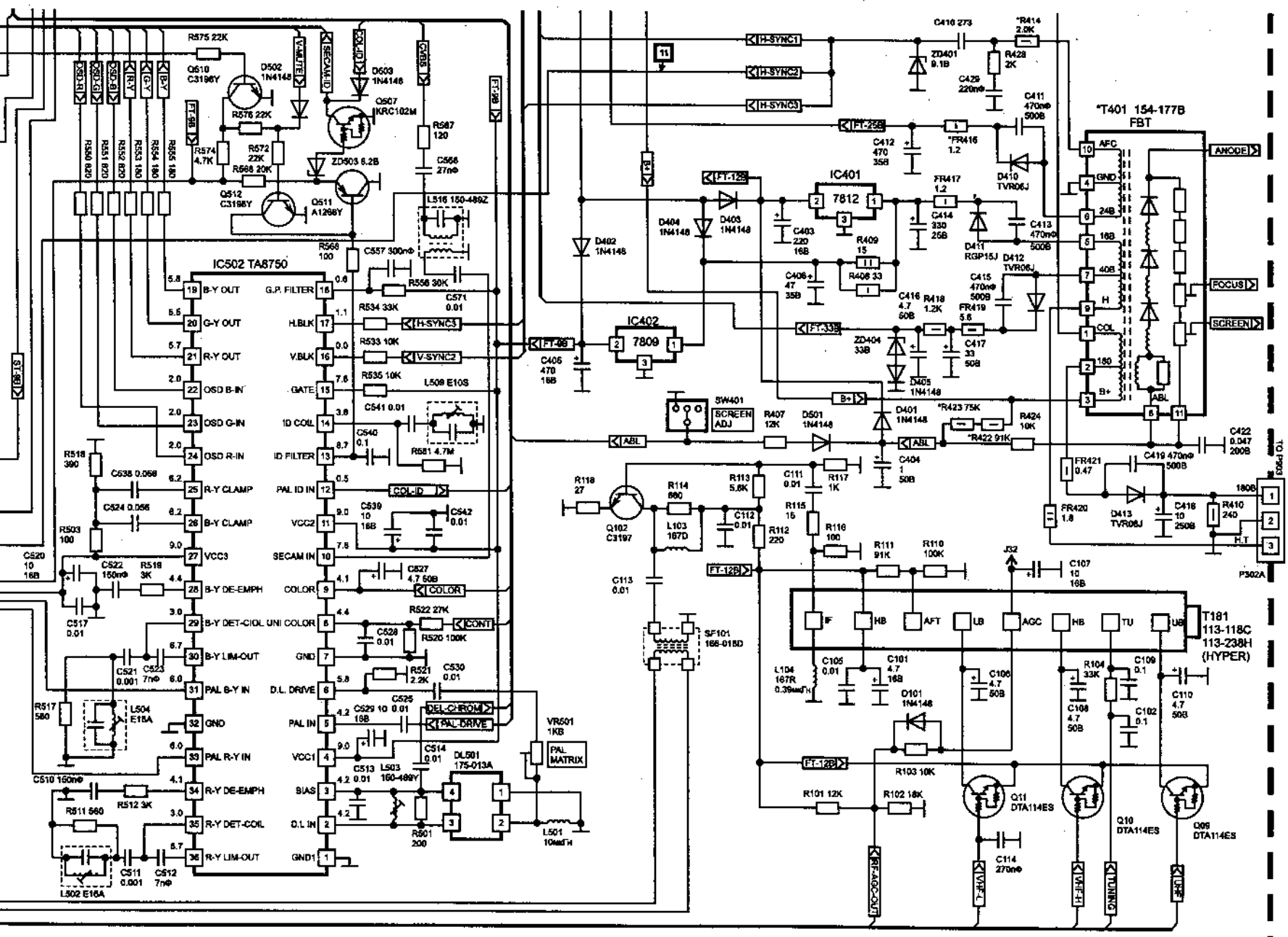
IC502 TA8750
IC401
7812
IC402
7809
*T401 154-177B
FBT
ANODE
FOCUS
SCREEN
T181
113-118C
113-238H
(HYPER)
P302A
TO P503
SW401
SCREEN ADJ
SF101
168-018D
DL501
175-013A
VR501
1KB
PAL MATRIX
L504
E16A
L502 E16A
L509 E10S
L516 150-489Z
L503
160-489Y
L501
10mH
Q102
C3197
Q510
C3196Y
Q512
C3196Y
Q511
A1298Y
Q507
KRC102M
Q11
DTA114ES
Q10
DTA114ES
Q09
DTA114ES
J32
H-SYNC1
H-SYNC2
H-SYNC3
V-SYNC2
COL-ID
COLOR
CONT
DEL-CHROM
PAL-DRIVE
RF-AGC-OUT
VHF-L
VHF-H
TUNING
UHF
B+
ABL
H.T
G.P. FILTER
H.BLK
V.BLK
GATE
ID COIL
ID FILTER
PAL ID IN
VCC2
SECAM IN
COLOR
UNI COLOR
GND
D.L. DRIVE
PAL IN
VCC1
BIAS
D.L. IN
GND1
B-Y OUT
G-Y OUT
R-Y OUT
OSD B-IN
OSD G-IN
OSD R-IN
R-Y CLAMP
B-Y CLAMP
VCC3
B-Y DE-EMPH
B-Y DET-CIOL
B-Y LIM-OUT
PAL B-Y IN
GND
PAL R-Y IN
R-Y DE-EMPH
R-Y DET-COIL
R-Y LIM-OUT

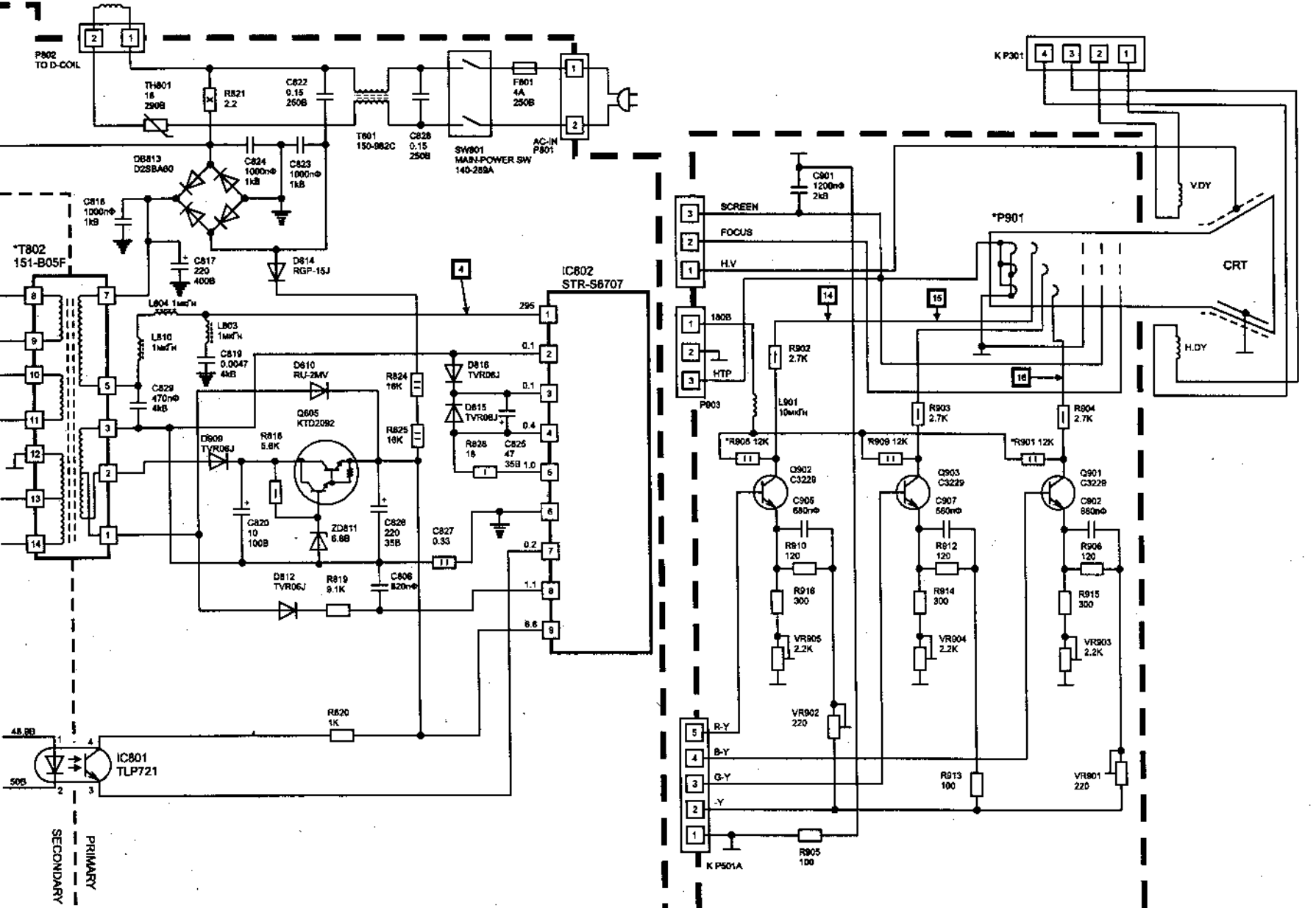
P802
TO D-COIL
TH801
16
290В
R821
2.2
C822
0.15
250В
T601
150-982C
C828
0.15
250В
SW801
MAIN-POWER SW
140-289A
F801
4A
250В
AC-IN
P801
DB813
D2SBA60
C824
1000пФ
1кВ
C823
1000пФ
1кВ
C816
1000пФ
1кВ
C817
220
400В
D814
RGP-15J
*T802
151-B05F
L804 1мкГн
L810
1мкГн
L803
1мкГн
C819
0.0047
4кВ
C829
470пФ
4кВ
D610
RU-2MV
Q605
KTD2092
R824
16К
R825
16К
D816
TVR06J
D815
TVR06J
R828
18
C825
47
35В
D809
TVR06J
R816
5.6К
C820
10
100В
ZD811
6.8В
C828
220
35В
C827
0.33
D812
TVR06J
R819
9.1К
C806
820пФ
R820
1К
IC602
STR-S6707
295
0.1
0.1
0.4
1.0
0.2
1.1
8.6
IC801
TLP721
SECONDARY
PRIMARY
K P301
V.DY
*P901
CRT
H.DY
C901
1200пФ
2кВ
SCREEN
FOCUS
H.V
180В
HTP
P903
R902
2.7К
L901
10мкГн
R903
2.7К
R904
2.7К
*R905 12К
*R909 12К
*R901 12К
Q902
C3229
Q903
C3229
Q901
C3229
C905
680пФ
C907
560пФ
C902
680пФ
R910
120
R912
120
R906
120
R916
300
R914
300
R915
300
VR905
2.2К
VR904
2.2К
VR903
2.2К
VR902
220
VR901
220
R-Y
B-Y
G-Y
-Y
R913
100
R905
100
K P501A